rapidline
FURNITURE FOR TODAY

Item No. : **RS1 WHITE**
Installation guide

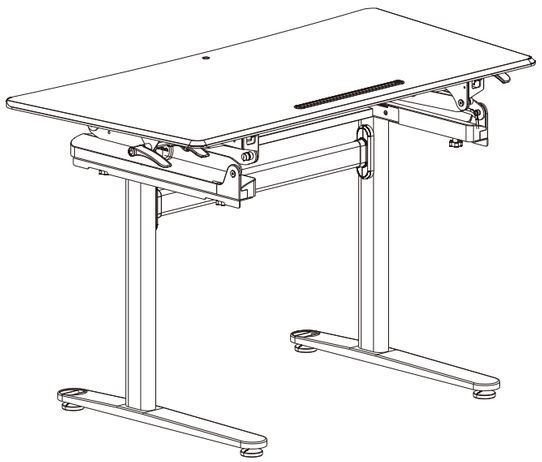

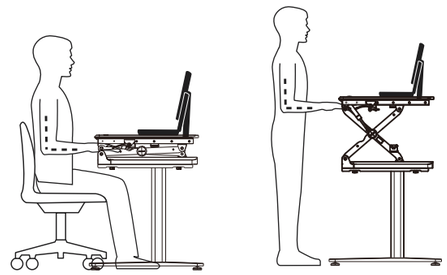

Technical Data

Desktop load-bearing:	Max:22KG
Height range:	750-1100mm

Accessory Package List

Note: The drawings below are only for reference and may be slightly different with the object, please in kind prevail. Any tool missing or installation problem, please contact the customer service freely.

No.	Spare part	Qty.	No.	Spare part	Qty.	No.	Spare part	Qty.	No.	Spare part	Qty.	No.	Spare part	Qty.
①	Desktop component	1	②	Left desk leg	1	③	Right desk leg	1	④	Knob	4	⑤	Combined beam	1
No.	Spare part	Qty.	No.	Spare part	Qty.	No.	Spare part	Qty.	No.	Spare part	Qty.	No.	Spare part	Qty.
⑥	Plastic cap	4	⑦	Plastic decorative cover	2	⑧	Adhesive buckle	4	⑨	Allen Key 5x5mm	1	⑩	Cable management	1

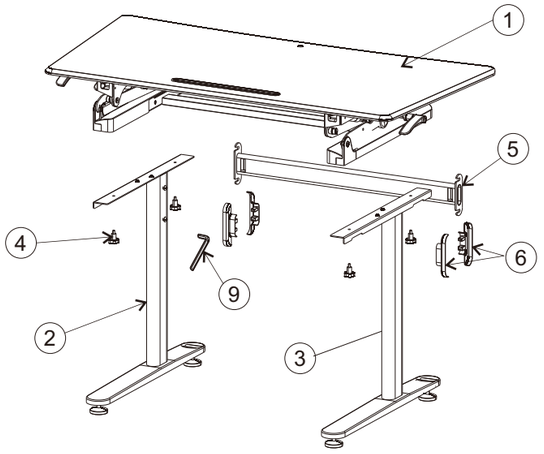

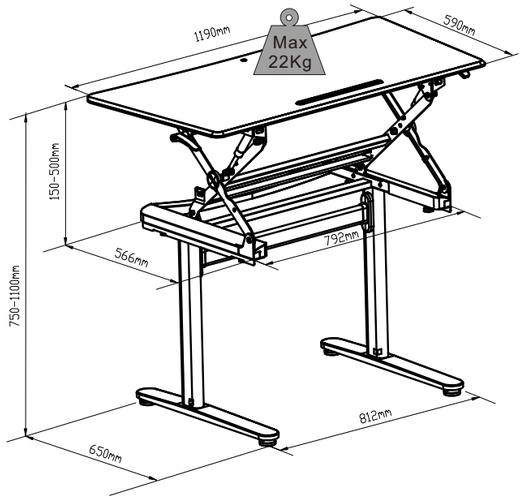

ASSEMBLY STEP 1

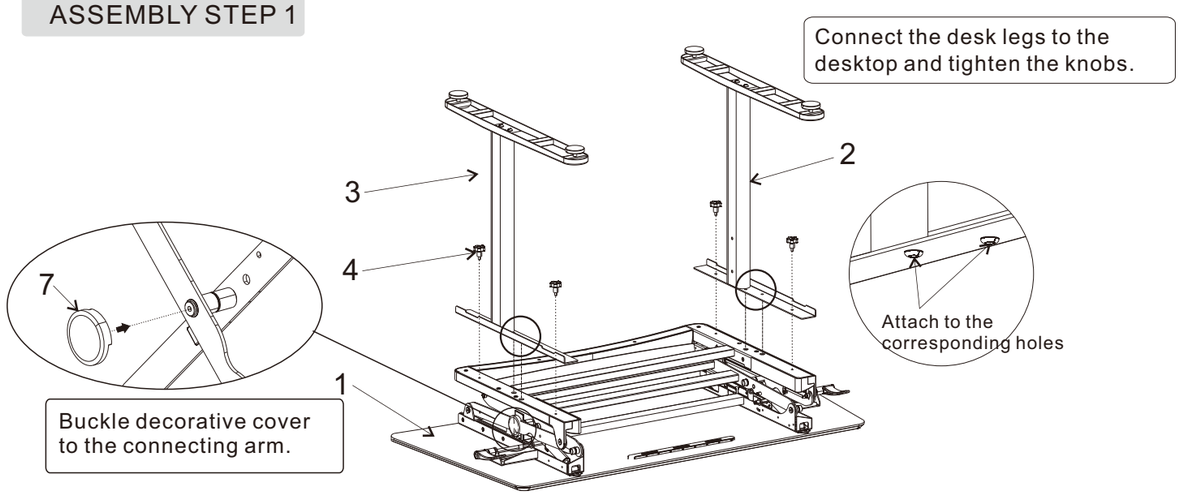

ASSEMBLY STEP 2

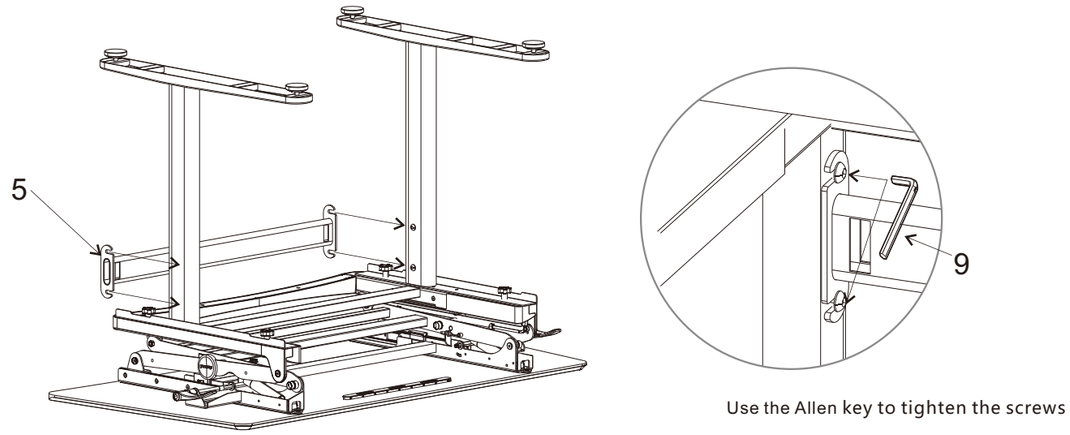

ASSEMBLY STEP 3

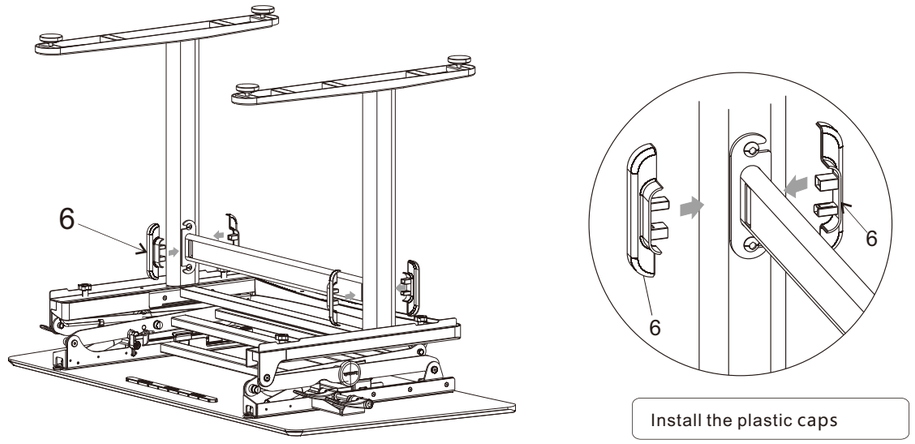

ASSEMBLY STEP 4

Press the handle grips both sides simultaneously to adjust the workstation to the proper height.

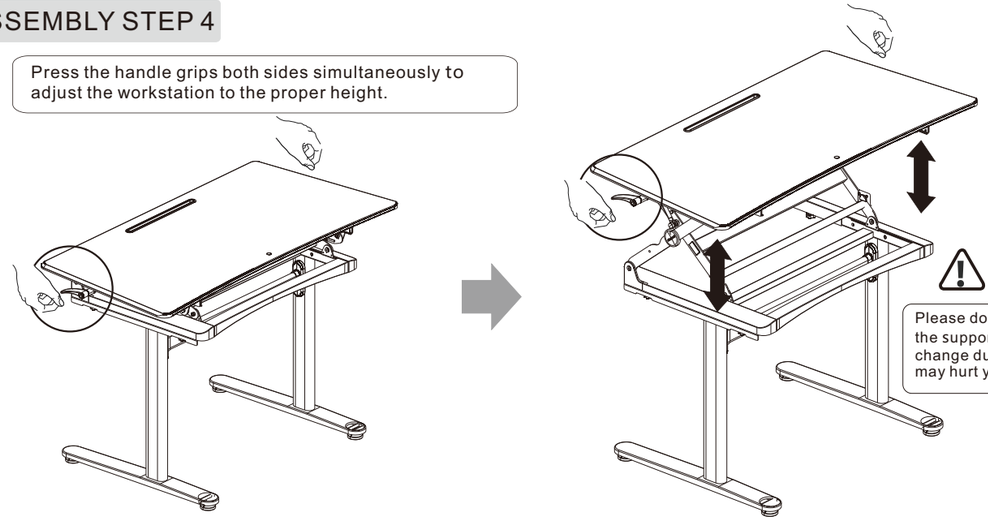

Please do not put hands near the supporting bars, as they change during adjusting and may hurt you.

ASSEMBLY STEP 5

Please put the devices onto the top of the workstation.

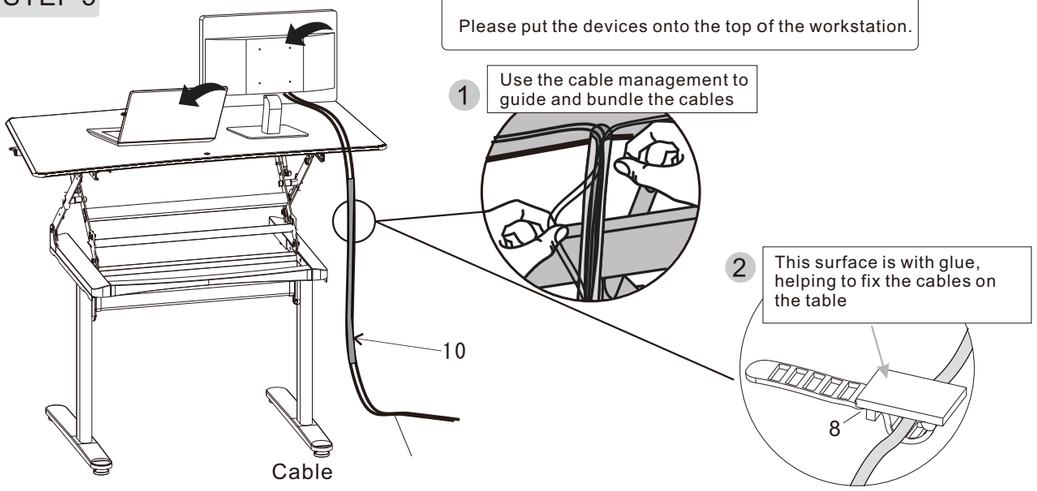

Warning

This product contains small items that could be a choking hazard if swallowed. Keep these items away from young children.

- Make sure these instructions are read and completely understood before attempting installation. If you are unsure of any part of this installation, please contact a professional installer for assistance.
- Safety gear and proper tools must be used. A minimum of two people are required for this installation. Failure to use safety gear can result in property damage, serious injury or death.
- Please check joint parts every two months, making sure the screws are loosened or not.
- Note: this product is intended for indoor use only. Use of this product outdoors could lead to product failure or personal injury.

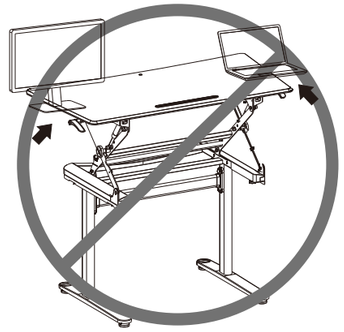

Attention

Please make sure all installed equipments are on the table, and not sticking out of the edge, or it may harm or cause damage.

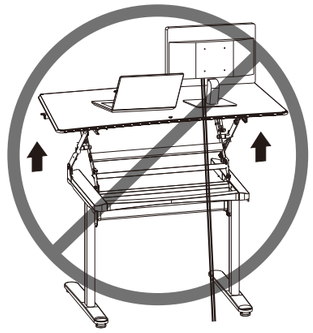

Attention

Please leave enough length of cable for height adjustment function, otherwise it may cause unexpected lost.

Warning

Please first adjust it to the highest, then remove equipment to avoid harm or damage.

WARNING

Hands Pinching

Do not place your hand near the strut. Strut's angle will change during the desktop lifts and it may hurt you.

Warning

Please do not put hands near the supporting bars, as they change during adjusting and may hurt you.